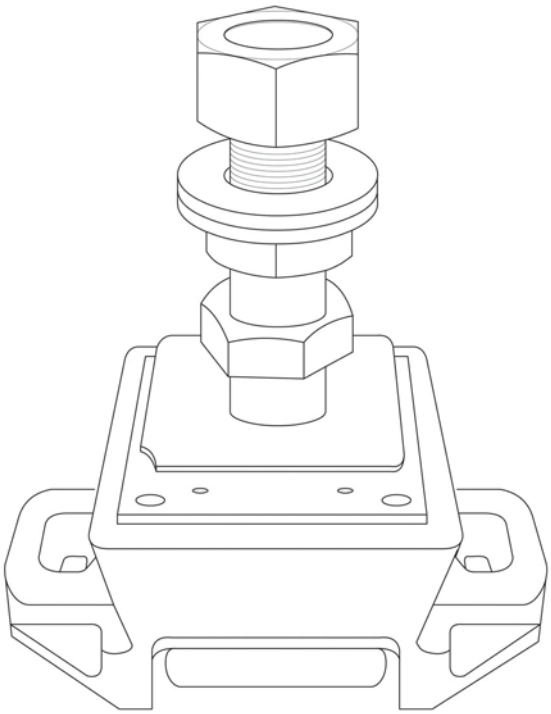

Figure 4-12: Typical Cummins Supplied Vibration Isolator

If a flexible engine mounting system is used, the proper support bracket locations must be used for mounting the engine and gear (see Figure 4-8). Use the mounting pads on the marine gear (1) and at the front of the engine (2) to absorb the propeller thrust.

The engine must not be mounted with brackets off the flywheel housing when using a direct mounted gear, unless they are used in conjunction with front and rear mounts for a six point mounting system, or when a saddle bracket is installed, which connects the engine flywheel housing and marine gear together for the purpose of reducing bending moment at the rear face of the block (see discussion on bending moment at the end of this subsection). When using a six point mounting system, the engine should be aligned initially using the front and rear mounts. Once the alignment is complete, the middle mounts attached to the flywheel housing are loaded and alignment is rechecked.

The use of the flywheel housing support as a rear mount location on some engines is only recommended with remote mounted gears or jet drives.

NOTE: *The following instructions are specific to vibration isolators that are Cummins supplied. However, comparable vibration isolators will require similar installation techniques. Non-Cummins supplied isolators must meet that manufacturer's installation requirements.*

! **Vibration isolators must be installed so their horizontal centerline is parallel to the crankshaft centerline and their vertical centerline is parallel to both the engine vertical centerline and to the rear face of the block.**

Vibrations isolators are designed to provide the most efficient dampening of driveline vibrations when they are installed per the manufacturer's recommendations. If the vibration isolator is misaligned, it distorts and stresses the isolator element and adversely affects the dampening characteristics. Vibration isolator service life may also be significantly reduced if misaligned (see Figures 4-13 and 4-14).

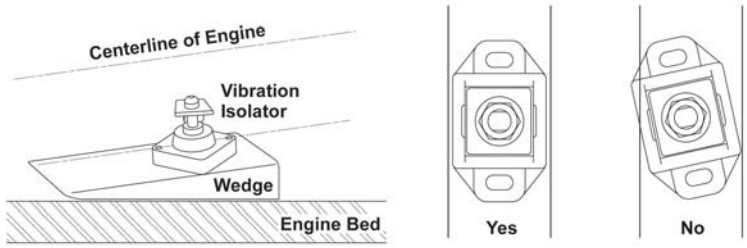

Figure 4-13: Horizontal Centerline of Isolator is Parallel with Crankshaft Centerline

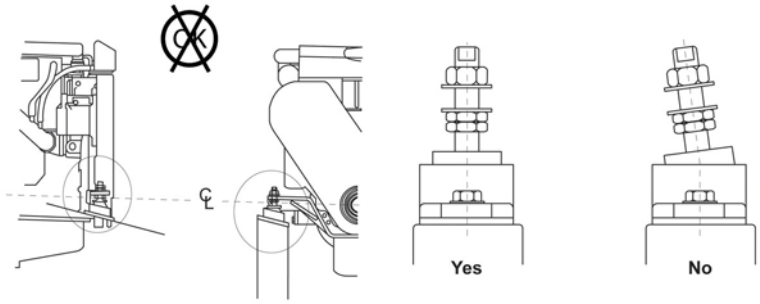

Figure 4-14: Vertical Centerline of Isolator is Parallel to Engine Vertical Centerline

When installing Cummins supplied vibration isolators, a maximum misalignment angle applies to the fore and aft, side to side (roll), and yaw orientation of the vibration isolator. The maximum misalignment angle may differ, depending on the generation of isolator used. Older generations of isolators all use cast aluminum or cast iron housings (see Table 4-1). Illustrations and instruction describing how to measure the misalignment angles are given later in this document, under the heading of Vibration Isolator Angle Determination.

Measure Cast Housing	Maximum Misalignment Angle
Fore and Aft Pitch Angle	4 degrees
Roll Angle	2 degrees
Yaw Angle	2 degrees

Table 4-1: Vibration Isolator Maximum Misalignment Angles

The bolt holes used to attach the vibration isolators to the engine bed must be drilled accurately to avoid building in stresses across the mounts. If the holes are drilled after the engine is lowered in position, the isolators can be used as a hole marking template. If the holes are drilled before the engine is installed, the hole pattern must be accurate to within 1.5 mm (0.06 inch) on all of the dimensions shown in Figure 4-15.

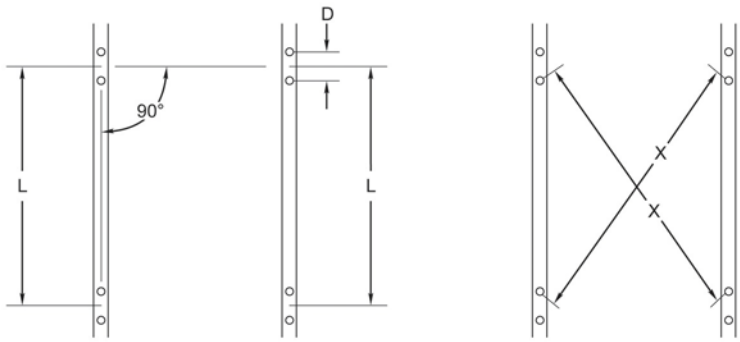

Figure 4-15: Dimensions L and D per Installation Drawings

Vibration isolators must be free to deflect and not be fully compressed under static load.

Vessel structures, hoses, cables, wiring, etc. must be located or routed so as not to interfere with the vibration isolator's normal range of motion, due to interference, binding, and/or restraint. Under a static load, the isolators should be adjusted so that they are equally loaded and not fully compressed. See the instructions given under Vibration Isolator Adjustment to properly determine loading on the isolators.

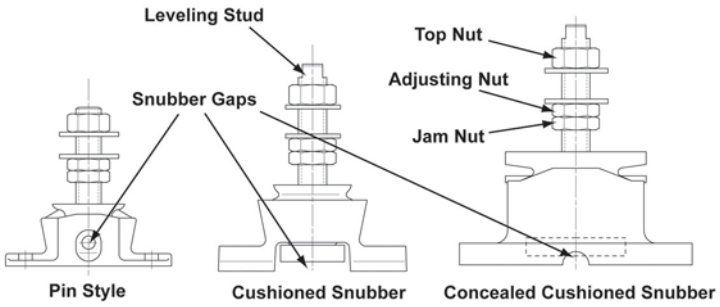

Figure 4-16: Vibration Isolator Snubber Gaps (Cast Housings)

Vibration Isolator Installation

1. The isolator base must be installed parallel to the crankshaft centerline to maintain the required range of motion, clearance, and isolation. It is also critical that the engine mount to isolator stud mating surfaces are parallel with the crankshaft centerline. The oil pan flange can be used as a visual reference to the crankshaft centerline. If the engine bed or stringer mounting system is not parallel to the engine mounts, the stringers must be leveled with shims or wedges installed under the isolators, to correct the misalignment (see Figure 4-13). Shims and wedges must be made of non-compressible material such as brass, aluminum, or steel.

   Assemble the isolators to the engine mounts. The proper orientation of the fastening hardware on the isolator stud from bottom to top is: jam nut, adjusting nut, washer, engine mount, washer, and top nut (see Figure 4-16). Position the nuts so that some thread adjustment is available both upward and downward. If the engine mount is slotted, position the leveling stud in the center of the slot. This will allow for adjustment in all directions when performing the engine alignment.

1. It is also necessary for the isolator stud to be perpendicular to the isolator base in all directions. Instructions on how to measure the misalignment and find the limits is included in the section titled Vibration Isolator Angle Determination.
2. Lower the engine into place so the four isolator bases rest in the desired position on the stringers. Bolt them lightly to the stringers. Do not remove the lifting hoist yet. Align the engine and marine gear with the propeller shaft to specification, and then begin to transfer the weight of the engine from the hoist to the mounts by using the adjusting nuts on all the isolators (see Figure 4-16). Do not move the adjusting nuts without assist from the hoist until the engine weight is close to evenly distributed. Failure to support the engine could result in damage to the stud and nut threads. Once the weight is evenly distributed, the hoist can be removed.

Vibration Isolator Adjustment

1. Cummins supplied vibration isolators are height adjustable to allow for engine alignment. Adjusting the height also adjusts the share of the weight carried by each isolator. It is very important to equalize the weight of the engine and gear between the isolators. In some situations, the load will not be completely equalized between the front and rear isolators. However, the load should always be equalized between the sides of each engine.
2. On cast housing isolators with rubber snubber located between the cast housing and the stringer, the snubber serves as a load indicator. When the isolator is properly loaded, the rubber snubber should not be touching the housing or the stringer. If the snubber is touching the housing, the isolator is under-loaded. If the snubber is touching the stringer, the isolator is overloaded. Under static conditions, the snubber gap

should maintain a clearance of at least 1mm (0.040 in). The gaps above and below the snubber will vary from 1 to 5 mm (0.04-0.20 inch), depending on the load (see Figure 4-16).

On cast housing isolators with a concealed snubber, a feeler gage can be inserted through the half-moon opening under the base casting to get an approximate measurement of the gap. If the gap is 8 mm (0.312 in) or more, the isolator is under-loaded. If the gap is less than 1mm (.040in), the isolator is overloaded (see Figure 4-16).

On pin-style isolators, the pin serves as a load indicator. The isolator is correctly loaded when the pin is at least 3 mm (0.125 in) from the edge of the hole in the cast housing. If the pin is touching the top of the hole, the mount is under loaded and will not isolate well. If the pin is at the bottom, the mount is overloaded (see Figure 4-16).

1. To apply load to an isolator, turn the adjusting nut so that it moves upward. This lifts the engine at that corner, increases load, and compresses the isolator. You will see that when the nut goes up, the snubber goes down. To reduce load, turn the adjusting nut so that it moves downward. This lowers the engine at that corner and relieves load on the isolator. When the nut goes down, the snubber goes up. Adjust the isolator loads until the front isolators have similar snubber gaps and the rear isolators have similar snubber gaps.
2. Rotate the isolator housing, if necessary, to align its horizontal centerline parallel with the crankshaft centerline (see Figure 4-13). The yaw angle must not exceed 2 degrees. Tighten the isolators down to the stringers.
3. Adjusting the isolator snubber gaps may change the shaft flange alignment. Recheck alignment and repeat the process as necessary, to make sure that the isolators are properly loaded and the engine is aligned with the shaft. If major adjustments are needed to achieve proper loading and alignment, it may be necessary to add shims or modify the stringers to center the isolator studs to the engine mount. The vibration isolator top nut must not be more than 2 mm (.080in) above the flat on the stud. If the nut is too high on the stud, shims should be added under the vibration isolator to raise it.
4. Finally, the isolator stud lower nuts and upper nut must be tightened. Torque values are given below (see Table 4-2). Hold the adjusting nut and tighten the jam nut, then hold the stud with the flats or hex socket on the top of the stud (to prevent twisting) and tighten the top nut.

	Adjusting Nut / Jam Nut	Top Nut
.75 inch Diameter Stud	129 N•m (95 lb-ft)	195 N•m (144 lb-ft)
1 inch Diameter Stud	181 N•m (134 lb-ft)	285 N•m (210 lb-ft)

Table 4-2: Vibration Isolator Torque Values

1. The vibration isolators may settle slightly after installation. Re-check the engine/shaft alignment and snubber spacing after several days under full engine weight load. Minimum snubber gap is 1 mm (0.040 in) after 7-10 days.

NOTE: *The final alignment should not be done until after the vessel is waterborne and has been loaded to its normal operating condition for at least 24 hours. The alignment should be redone each time a flexible mounting system is disconnected from the propeller shaft.*

Vibration Isolator Angle Determination

Measuring the Fore and Aft Pitch Angle across the Isolator

Both methods shown (see Figure 4-17) are acceptable and give the same results, as long as the engine mount/bracket is flat and straight. If the engine mount/bracket is not flat and straight, use only Method 2.

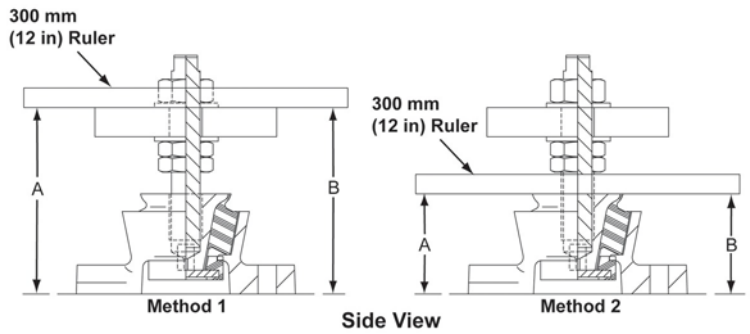

Figure 4-17: Method 1 and Method 2 - Side View of Isolator

1. With a 300 mm (12 in) ruler or straightedge centered on the isolator as shown, measure dimensions A and B at the ends of the ruler
2. Each degree of angle = 5 mm (.21in) of difference between A and B:

   Misalignment Angle = (A - B)/5mm or (A - B)/0.21in

1. The misalignment angle should not exceed 4 degrees or a 20.5 mm (0.84in) difference between A and B. If it does, realign the engine brackets or use wedges under the mount to get the angle below 4 degrees.

Measuring the Yaw Angle across the Engine Mount

The stringer edge can be used as a reference, if it runs in a straight line fore to aft in the hull. If it does not, find another reference that does run fore and aft in a straight line, and use that to make the following measurements: (see Figure 4-18)

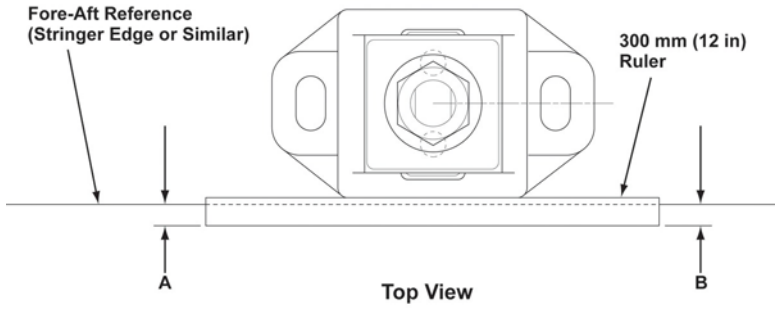

Figure 4-18: Top View of Isolator

1. With a 300 mm (12 in.) ruler or straightedge centered on the isolator as shown, measure dimensions A and B.
   Measure at the ends of the ruler.
2. Each degree of angle = 5 mm (.21 in.) of difference between A and B:

   Misalignment Angle = (A - B)/5 mm or (A - B)/0.21 in.;

1. The misalignment angle should not exceed 2 degrees or a 10 mm (0.42 in) difference between A and B.

Measuring the Roll Angle across the Engine Mount

The vibration isolator housing is used as the reference (see Figure 4-19).

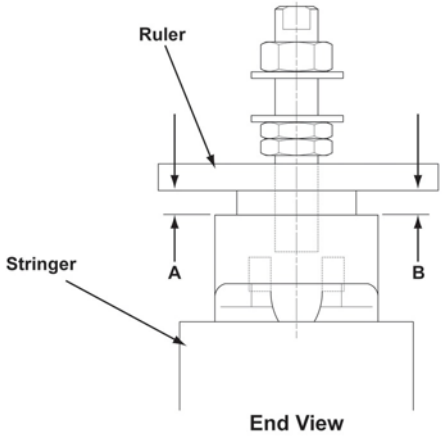

Figure 4-19: End View (Looking Forward)

1. With a short ruler or straightedge as shown, measure dimensions A and B at the edges of the mount's cast housing.
2. Each degree of angle = 1.5 mm (.06 in.) of difference between A and B:

   Misalignment Angle = (A - B)/1.5 mm or (A - B)/0.06 in.

1. The misalignment angle should not exceed 2 degrees or a 3 mm (0.12 in.) difference between A and B.

Bending Moment

The engine must be installed so that the static bending moment, at the point where the flywheel housing is attached to the engine, does not exceed the maximum value on the General Engine Data Sheet.

For assistance with calculating bending moments, contact your local Cummins Marine Certified Application Engineer.

Figure 4-20 illustrates the method for calculating the bending moment at the rear face of the block (M_{RFOB}) for a typical close coupled marine gear and four point mounting arrangement. The information needed for this calculation comes from the General Engine Data Sheet, installation drawing, marine gear manufacturer's information and the design of the mounting system. A bending moment calculator is also available in the Tools section of http://marine.cummins.com.