ITEM NUMBER
4954059

OPTIONS LIST
AC9312
BR9415
EE9177
EM9388
FF90375
FH9971
FW9958
HX9146
LA9260
LF9255
LG90135
OC9118
OP9464
PH9386
RG9355
SA9089
ST9487
SW9091
TB92005
VB9050
WI9449
XS9372

REVISIONS				
ZONE	REV	DESCRIPTION	DWN	APP'D
	00	ORIGINAL RELEASE	JPH 10-24-12	

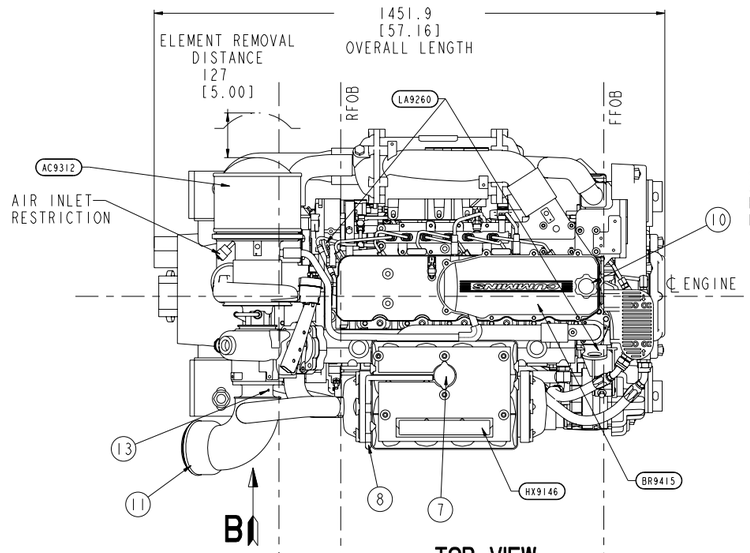

TOP VIEW

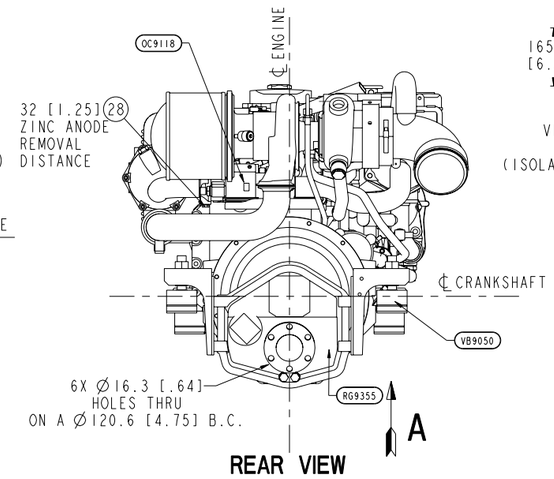

REAR VIEW

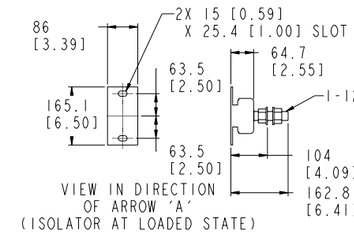

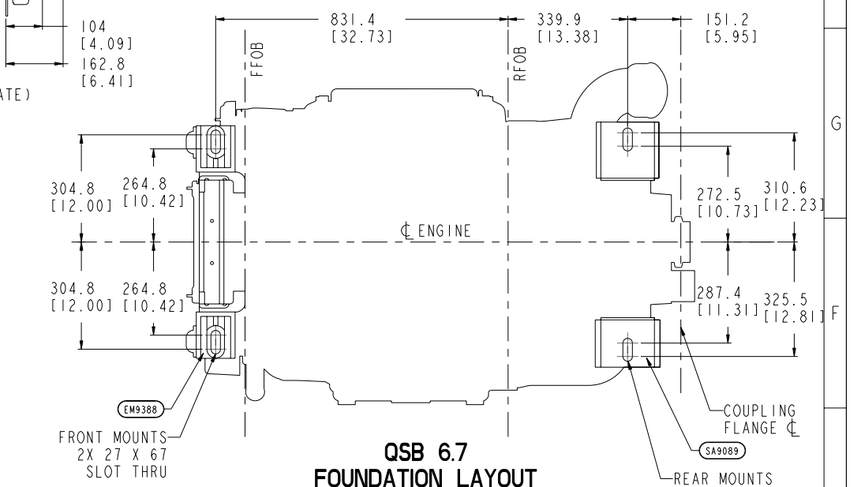

QSB 6.7
FOUNDATION LAYOUT

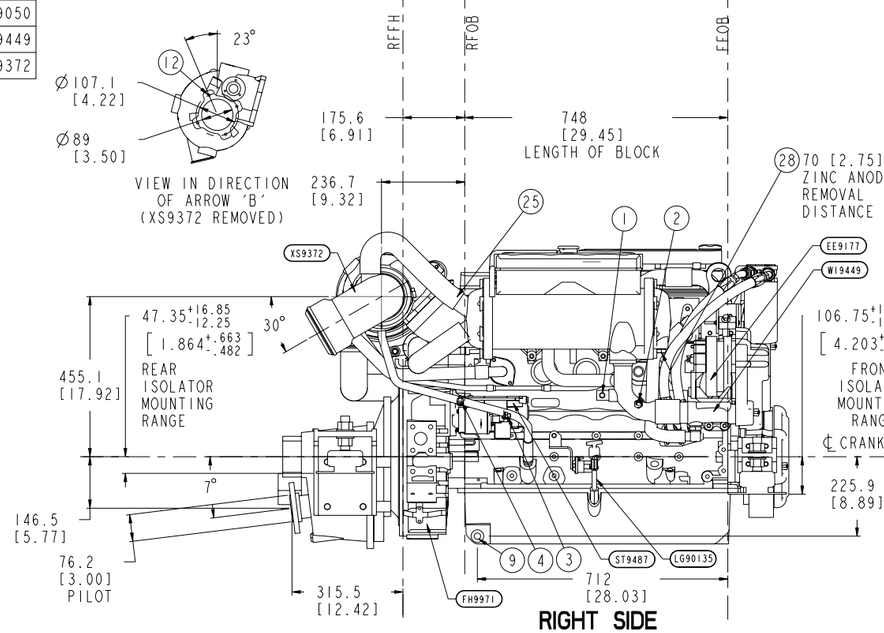

RIGHT SIDE

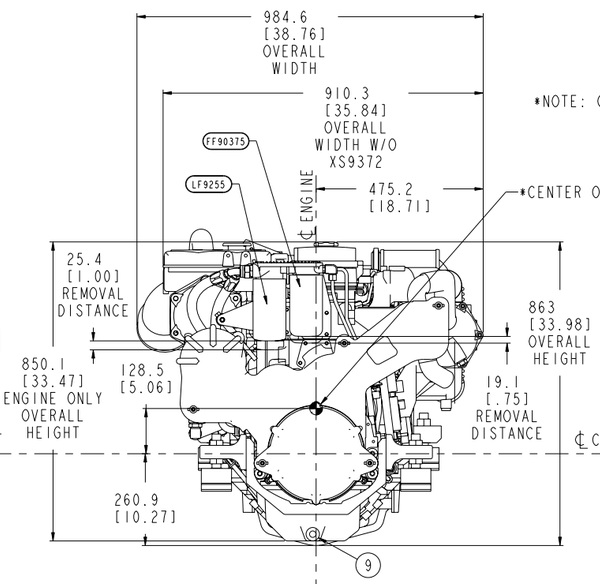

FRONT VIEW

*NOTE: CENTER OF GRAVITY INCLUDES GEAR.

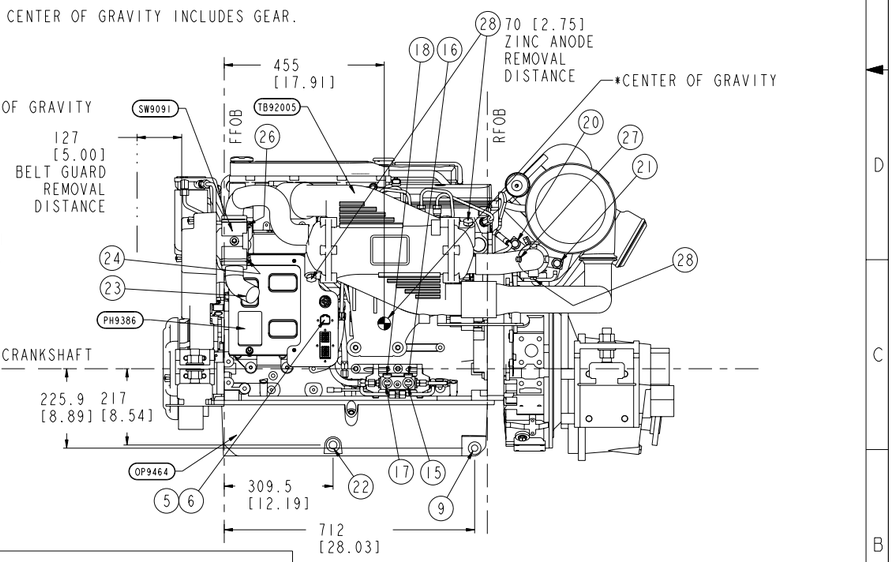

LEFT SIDE

ENGINE SERVICE TEST PORTS/INSTALLATION CONNECTIONS

1	AUXILIARY HEATER RETURN:	5/8 BARBED
2	AUXILIARY HEATER SUPPLY:	5/8 BARBED
3	BATTERY CONNECTION (STARTER) (+):	M10 X 1.5
4	BATTERY CONNECTION (STARTER) (-):	M10 X 1.5
5	BATTERY CONNECTION (ECM) (+):	4 PIN CONNECTOR
6	BATTERY CONNECTION (ECM) (-):	4 PIN CONNECTOR
7	COOLANT FILL:	Ø31.2 [1.23]
8	COOLANT OVERFLOW TUBE:	7.9 I.D. [.31]
9	ENGINE OIL DRAIN:	M18 X 1.5
10	ENGINE OIL FILL:	Ø32.1 [1.27]
11	EXHAUST OUTLET CONNECTION (ELBOW):	Ø152.4 [6.00] O.D.
12	EXHAUST OUTLET CONNECTION (TURBO):	4X M8 X 1.25 ↧ 17.8
13	EXHAUST TEMP. /BACK PRESSURE TEST PORT:	1/4-18 NPT
14	EXHAUST TEMP./SW FLOW SENSOR	N/A
15	FUEL INLET CONNECTION:	7/8-14 (STOR FEMALE)
16	FUEL INLET TEST PORT:	M10 X 1.0
17	FUEL RETURN TO TANK CONNECTION:	3/4-16 (STOR FEMALE)
18	FUEL RETURN TEST PORT:	M10 X 1.0
19	GEAR OIL COOLER DRAIN:	3/8 NPT
20	GEAR OIL COOLER INLET:	M22 X 1.5
21	GEAR OIL COOLER OUTLET:	M22 X 1.5
22	OIL HEATER CONNECTION:	M22 X 1.5
23	SEA WATER INLET:	Ø50.8 [2.00] O.D.
24	SEA WATER INLET TEST PORT:	1/4-18 NPT
25	SEA WATER OUTLET:	Ø50.8 [2.00] O.D.
26	SEA WATER OUTLET TEST PORT:	1/4-18 NPT
27	SHAFT LOG SEA WATER SUPPLY:	1/4 NPT
28	ZINC ANODE:	4X 1/2-14 NPT 3/8-18 NPT (OIL COOLER)

PRODUCT GRAPHICS FILE
NO ORIGINAL DRAWING EXISTS FOR THIS ITEM. THE ENGINEERING GRAPHICS DATA FOR THIS ITEM RESIDES IN THE PRODUCT GRAPHICS FILE AND IS CONTROLLED BY THE AGENCY DESIGNATED AS HAVING ITEM CONTROL.

DO NOT SCALE THIS DRAWING

THIS DRAWING/DATA FILE (AND THE INFORMATION SHOWN THEREON) IS CONFIDENTIAL AND PROPRIETARY AND SHALL NOT BE USED, DISCLOSED TO OTHERS, OR REPRODUCED BY ANY MEANS FOR ANY PURPOSE IN HARD COPY FORM OR IN MACHINE READABLE FILES, WITHOUT WRITTEN CONSENT OF CUMMINS INC., MARKETING CAD SERVICES DEPARTMENT.

LAST SECTION LETTER USED: :
REF. DRAWING STANDARDS: ANSI Y14.5M ISO 81101
UNLESS OTHERWISE SPECIFIED DIMENSIONS ARE IN: MILLIMETERS
T 1 ARE IN: INCHES

DWN	JHANSEN	7-11-11
CHD	UNCHECKED	
APPD		
APPD		

CUMMINS INC.

ITEM NAME: QSB 6.7L W/ ZF 280-1 A
IDENTIFIER: INSTALLATION DIAGRAM
SIZE: J
CODE IDENT. NO.:
ITEM NUMBER: 4954059
SCALE: N/A
ITEM CONTROL: MCS
SHEET 1 OF 1