Wiring Diagram - Standard (B/C Series)

FOR SINGLE STATION SYSTEM

WATER TEMP. SENDER P/N 3913628

F	OHMS
105	287.4
180	64.5
210	39.7

OIL PRESS. SENDER P/N 3913627

PSI	OHMS
0	10
60	90.5
150	187

FOR DUAL STATION SYSTEM

WATER TEMP. SENDER P/N 3914081

F	OHMS
100	144
150	55
200	23
250	11

OIL PRESS. SENDER P/N 3913616

PSI	OHMS
0	5
60	45
150	93

ALTERNATOR OPTIONS

OPTION #1 – BOSCH K1

TO STARTER
RED
B+ – BATTERY CHARGING TERMINAL
D – ALT. INDICATOR
W – ALT. TACH DRIVE
BROWN
ORANGE
A B C

OPTION #2 – CAV

STARTER+
RED
BATTERY SENSING TERMINAL
BROWN
RED
ORANGE
INDICATOR TERMINAL
BLACK
STARTER–
TACH DRIVE
A B C

OPTION #3 – DELCO 15 SI

A B C
BROWN
RED
ORANGE
RED
TO STARTER
TACH DRIVE
VOLTAGE SENSING
INDICATOR LIGHT

FUEL SHUTOFF OPTIONS

OPTION #1 – BOSCH & NIPPONDENSO INLINE TYPE PUMPS

RED
WHITE
BLACK
A B C

OPTION #2 – CAV & BOSCH ROTARY TYPE PUMPS

PURPLE
BLACK
A B C

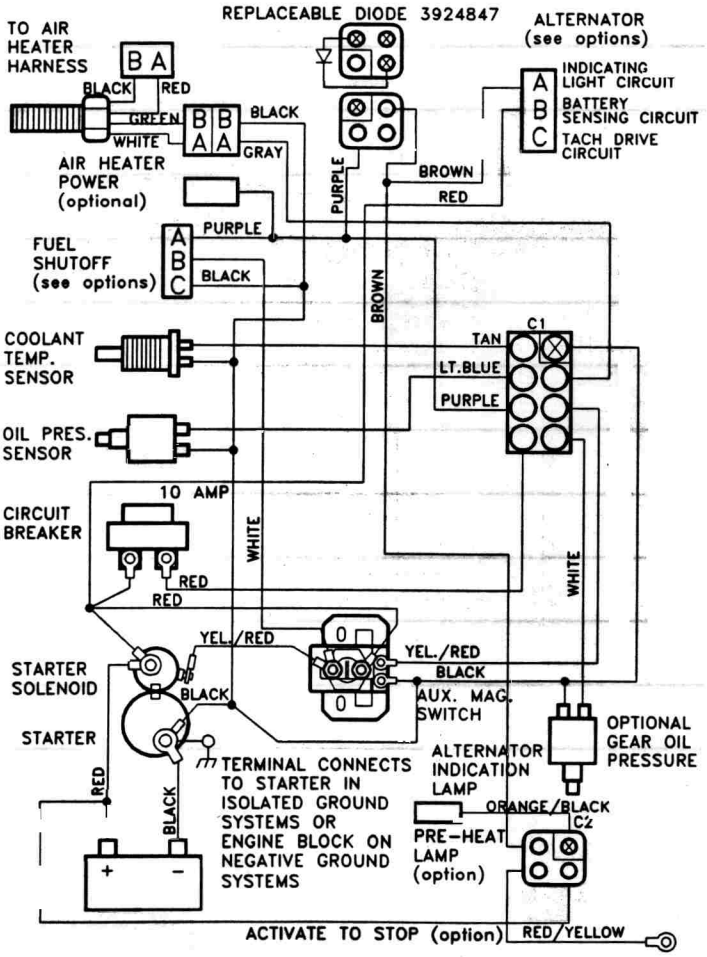

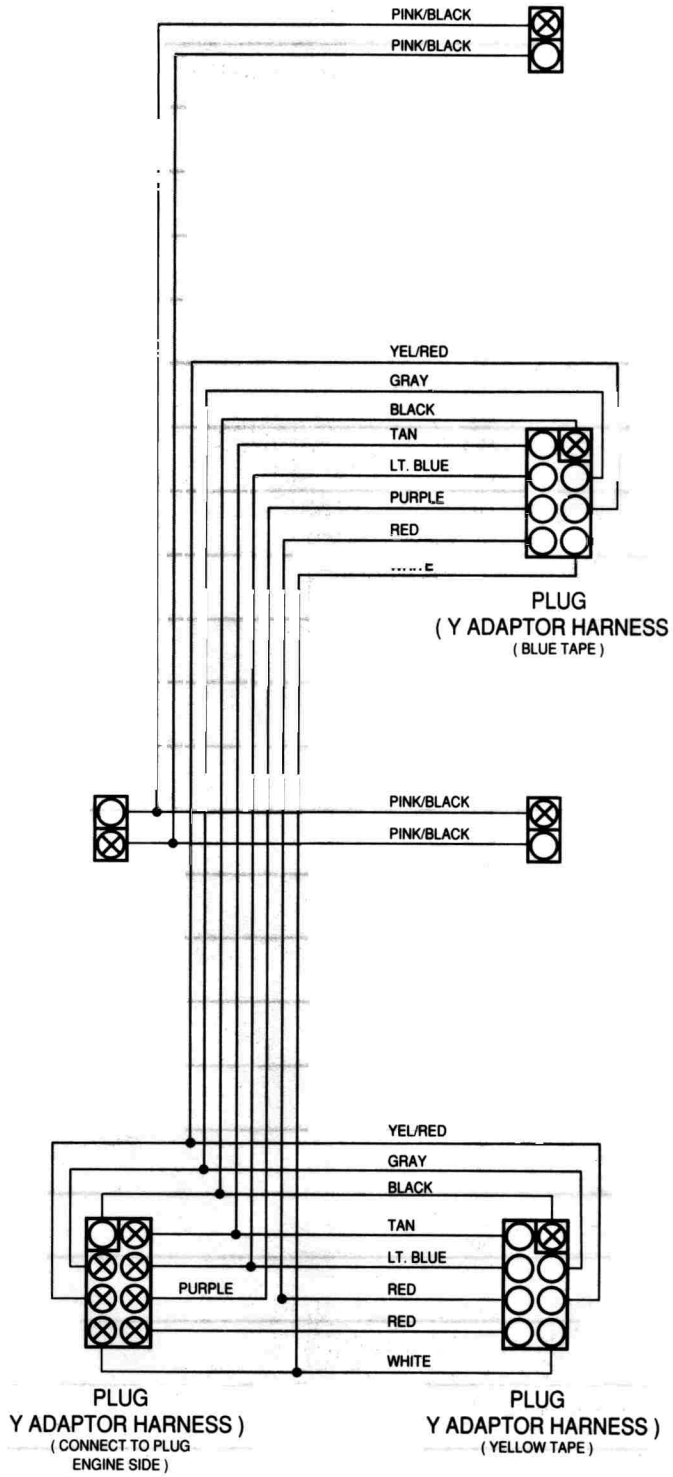

Y ADAPTOR HARNESS
(USE WITH DUAL STATION SYSTEM)