SEAFIRST

Model : HC200B-7					
Torque at 1000psi	131kg-m	947 lb.ft	Stroke	178mm	7 inch
Cylinder Bore	50mm	2 inch	Volume	262cc	16.0 cu.in
Shaft Diameter	25mm	1 inch	Shaft Connection	SS Ball Joint (3/4"Hole)	

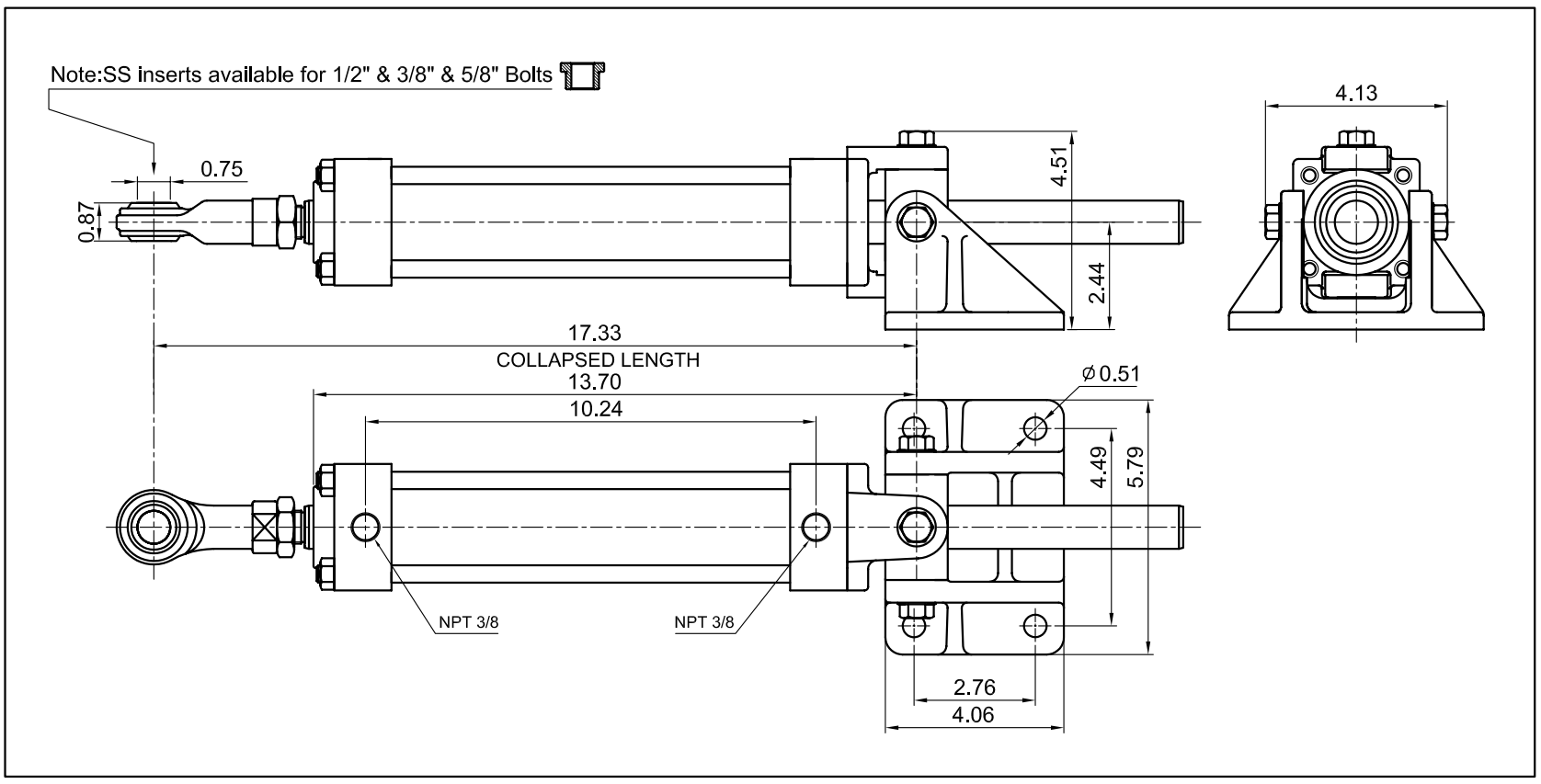

Model : HC200B-7 35°

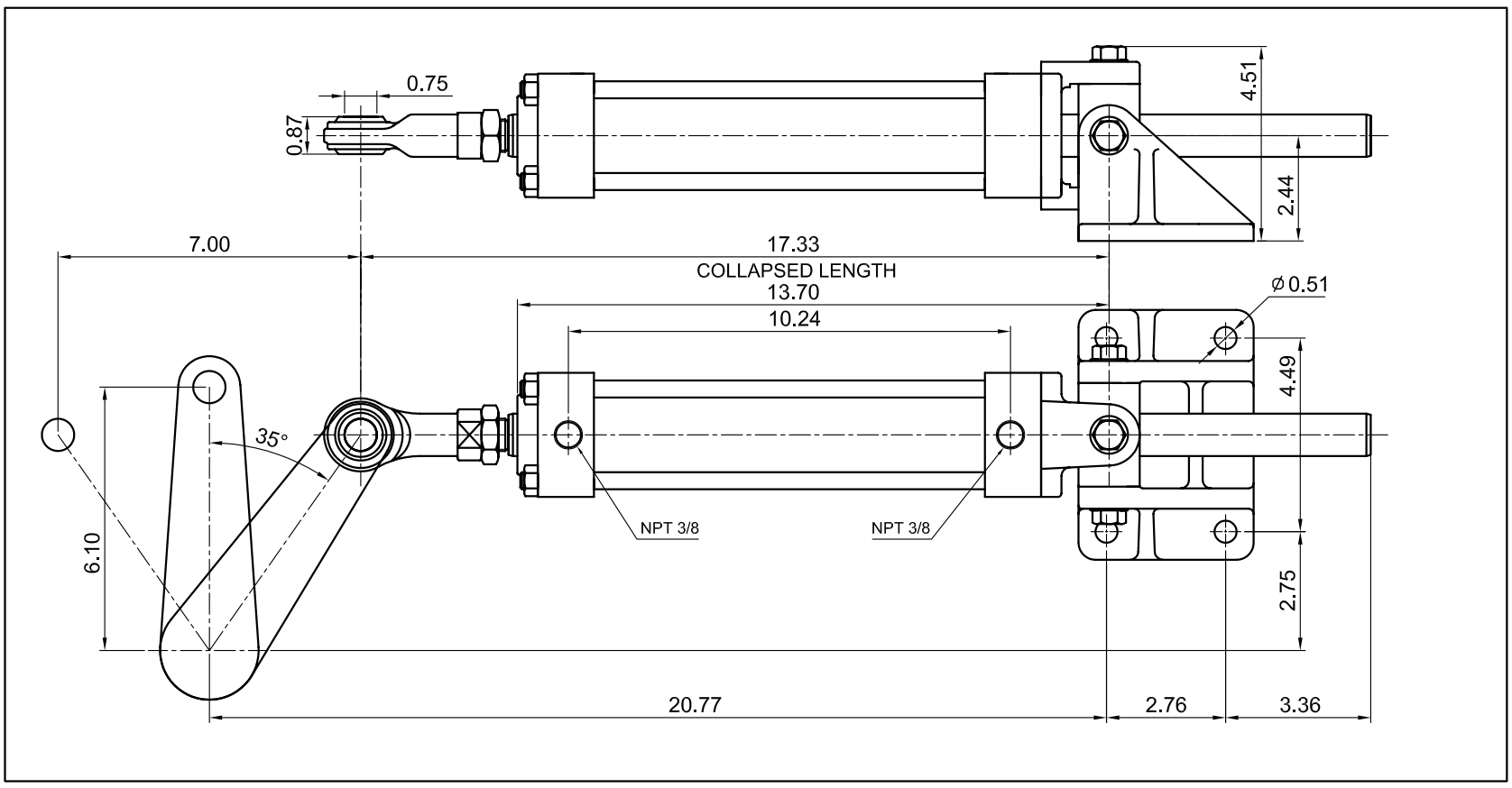
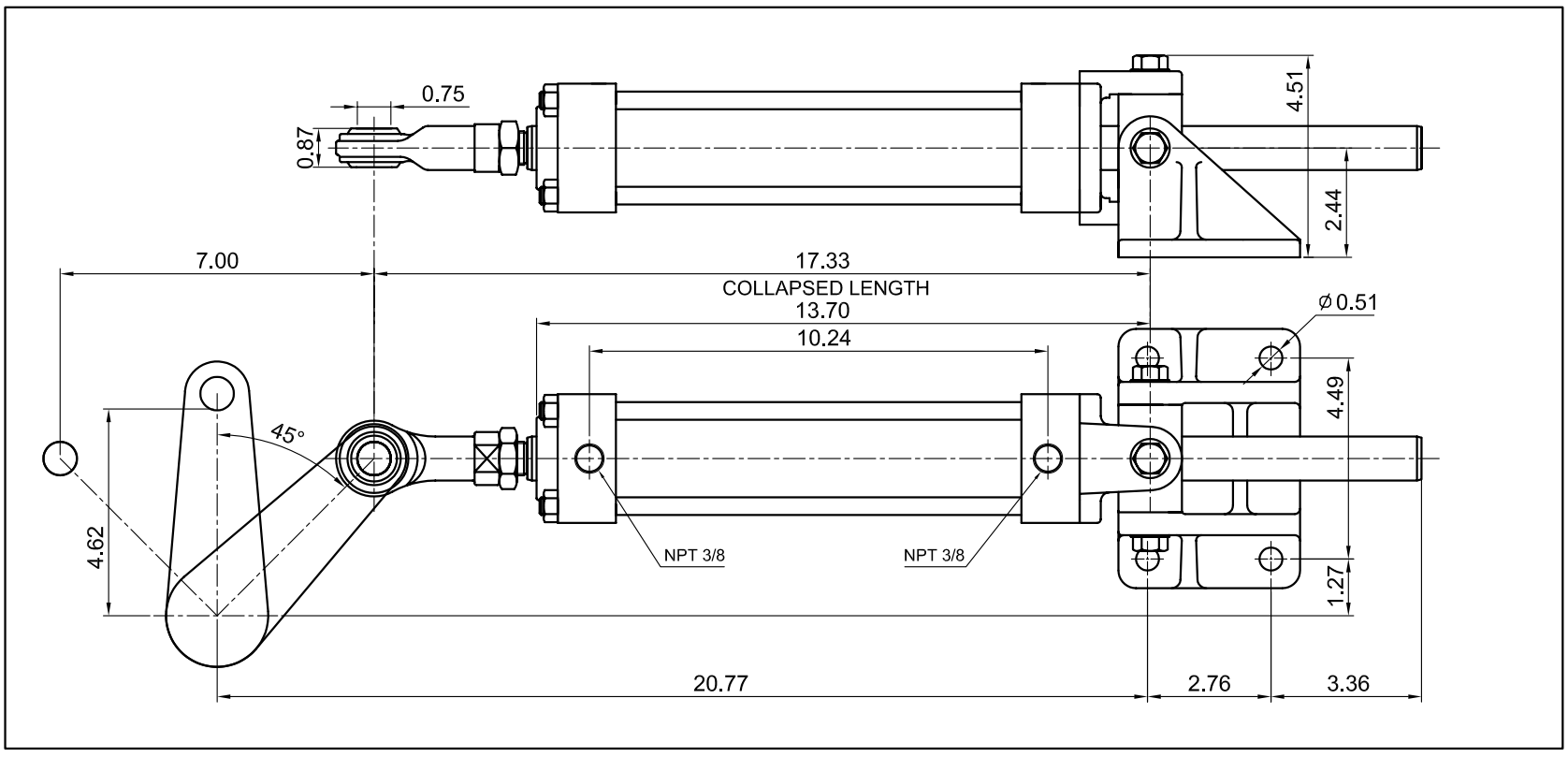
Model : HC200B-7 45°