SEAFIRST

Model : HC150B-5					
Torque at 1000psi	60kg-m	434 lb.ft	Stroke	127mm	5 inch
Cylinder Bore	40mm	1 1/2 inch	Volume	120cc	7.3 cu.in
Shaft Diameter	20mm	3/4 inch	Shaft Connection	SS Ball Joint (3/4"Hole)	

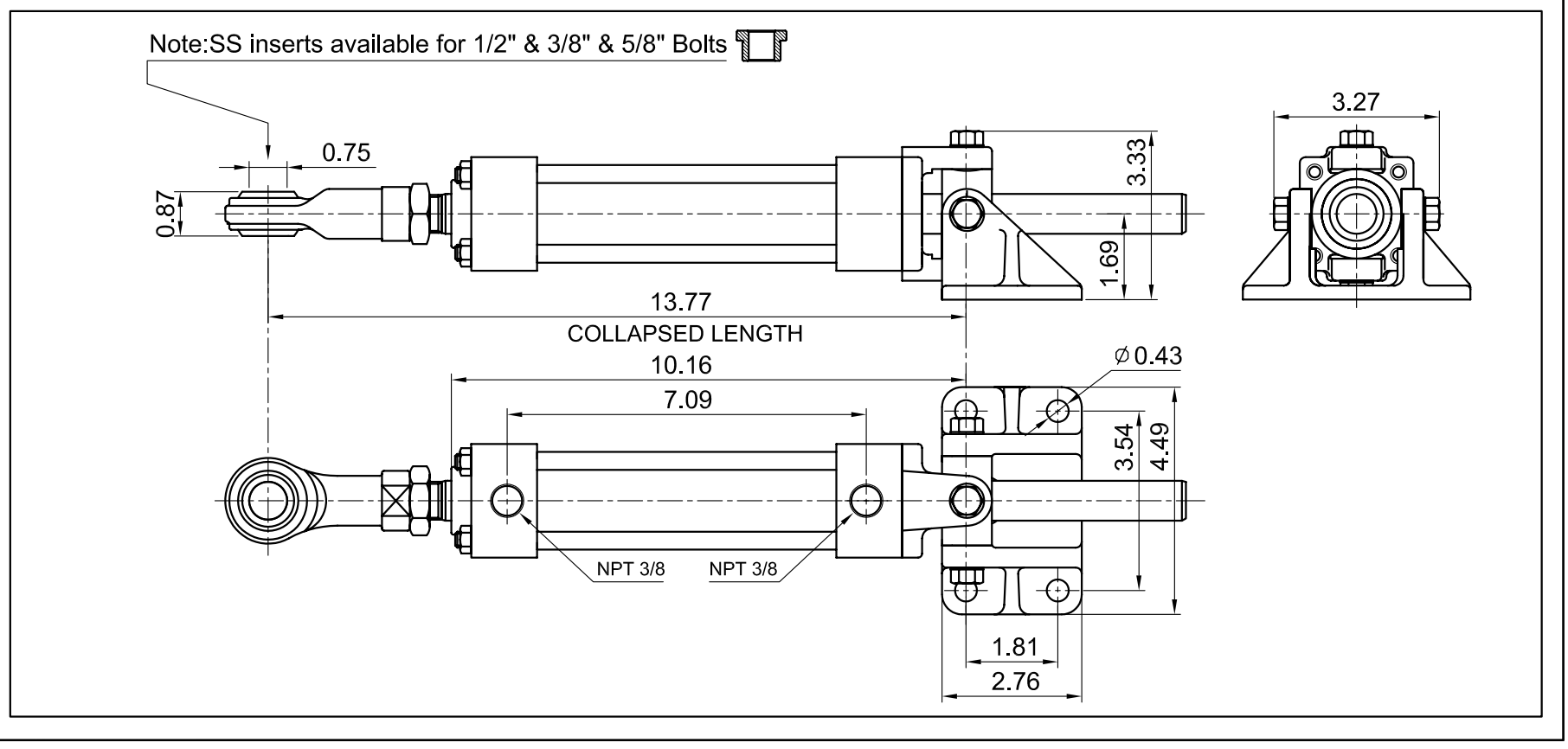

Model : HC150B-5 35°

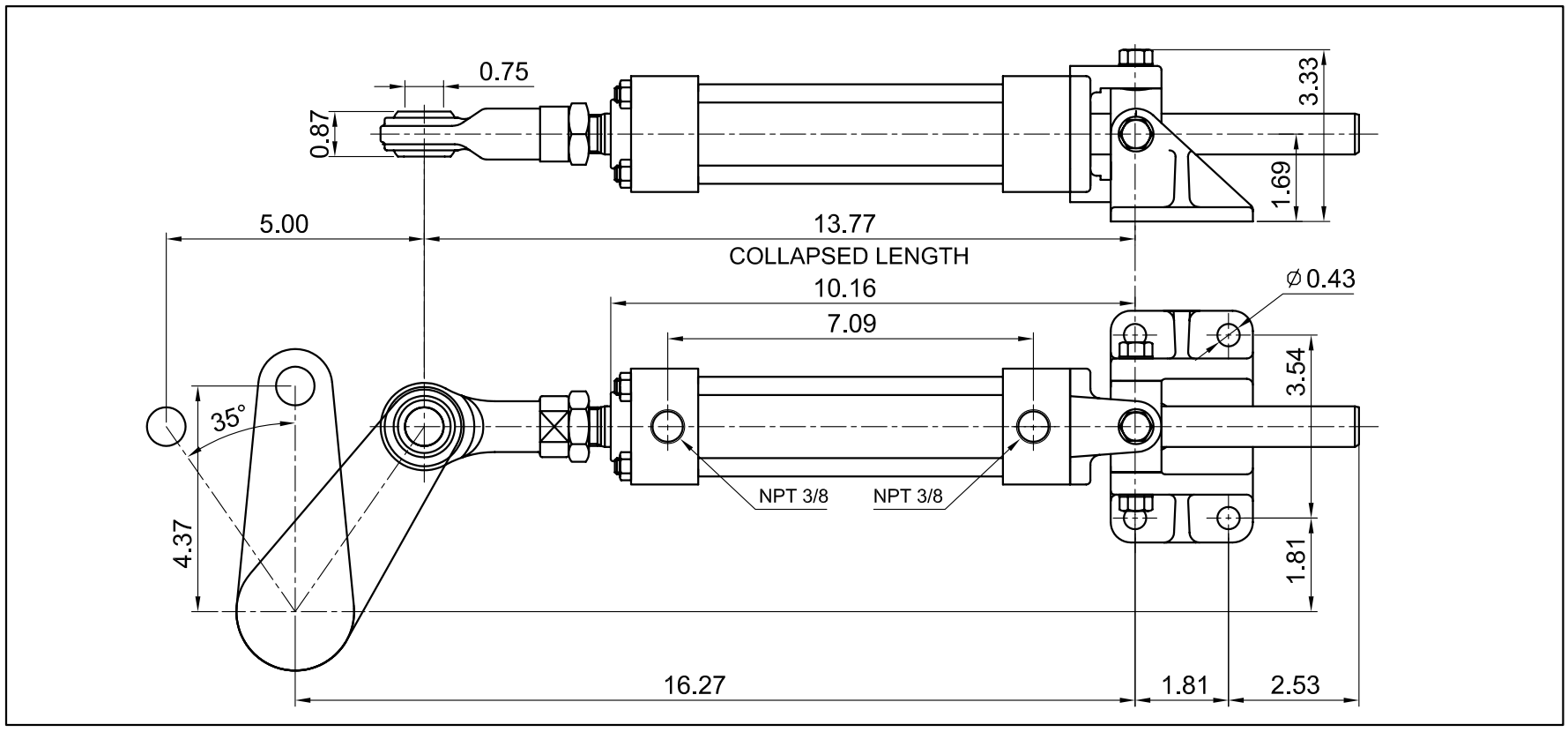
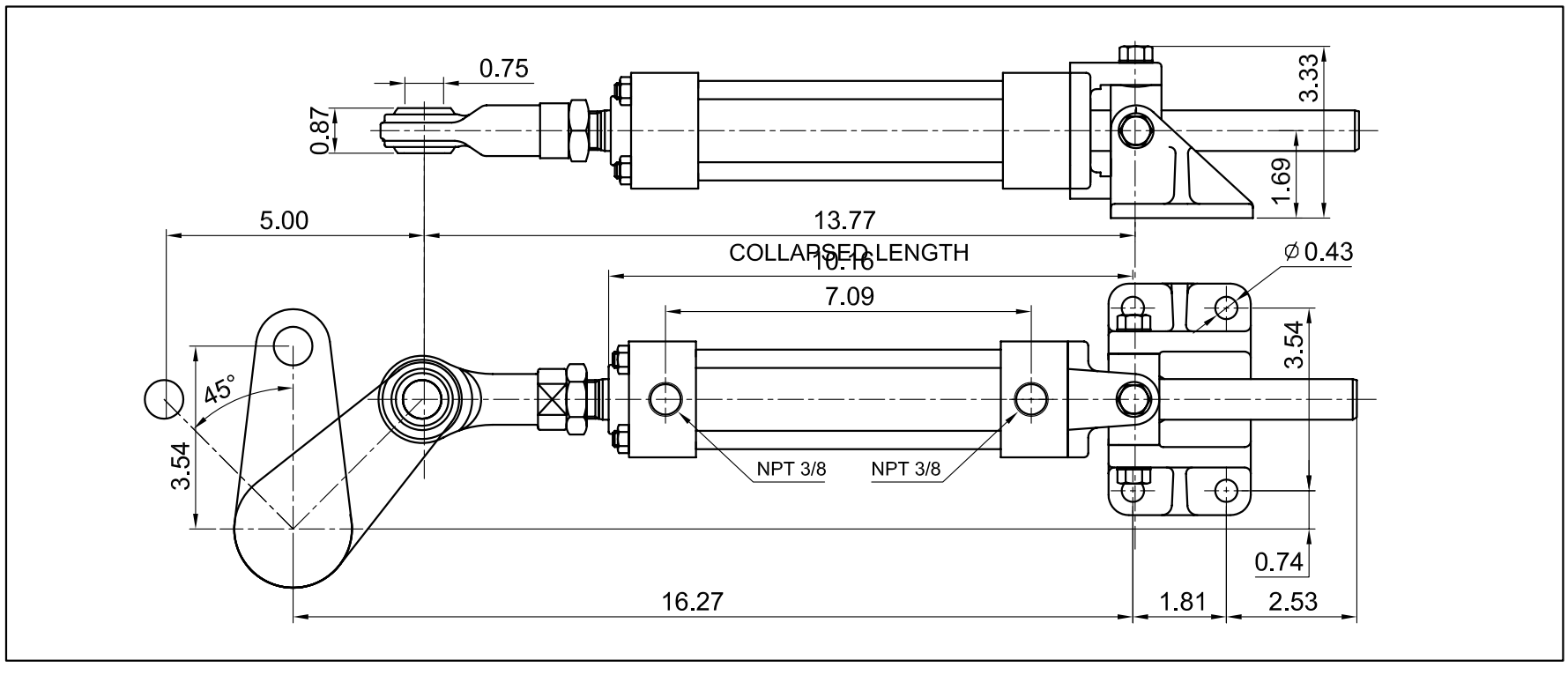
Model : HC150B-5 45°