ITEM NUMBER
4953827

REVISIONS				
ZONE	REV	DESCRIPTION	DWN	APP'D
	04	REQUEST 26686	MCS 28MAR11	SJ 30MAR11

1. UPDATED PER COLS SPEC OSL9 T4 INSTALLATION.

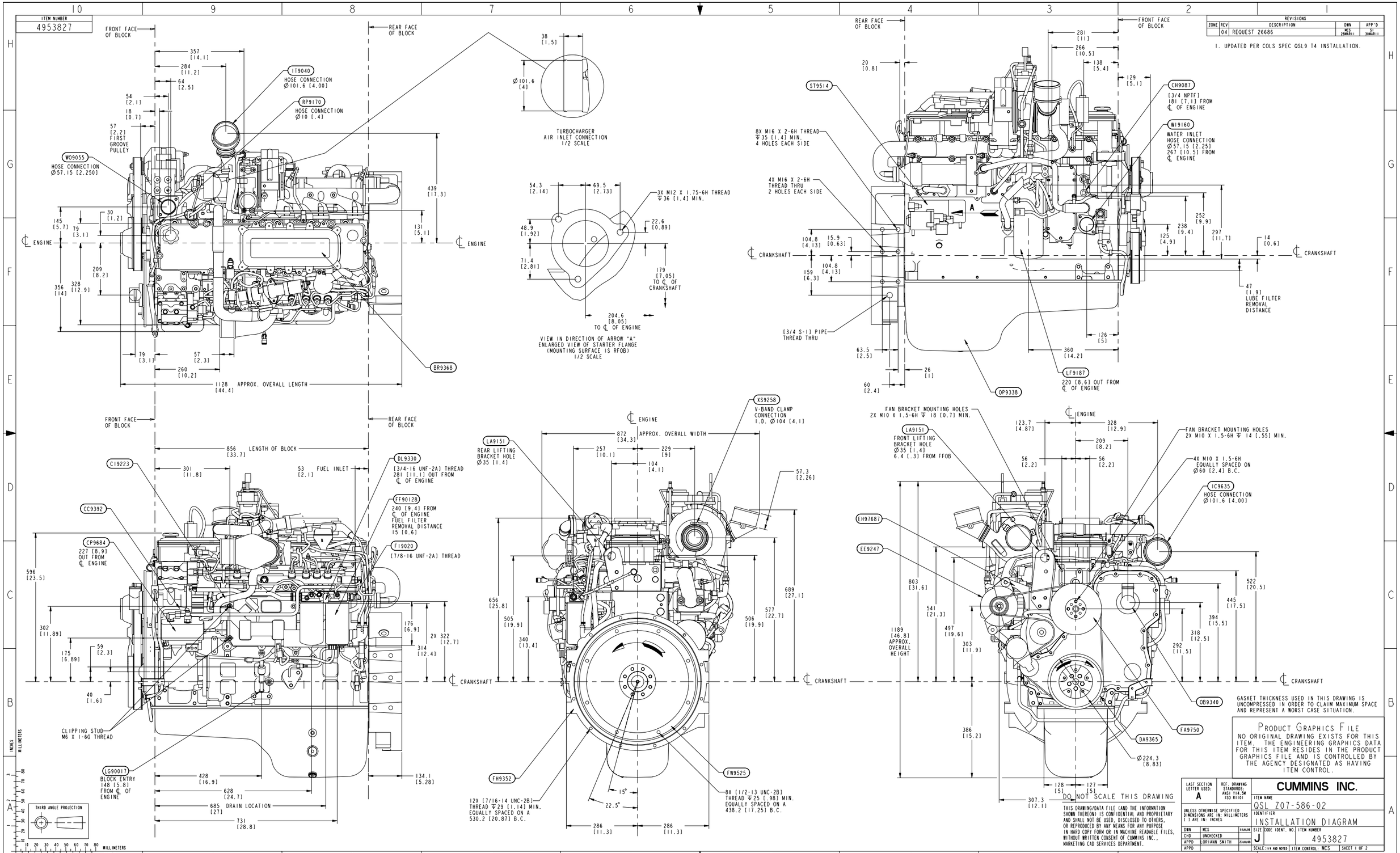

GASKET THICKNESS USED IN THIS DRAWING IS UNCOMPRESSED IN ORDER TO CLAIM MAXIMUM SPACE AND REPRESENT A WORST CASE SITUATION.

PRODUCT GRAPHICS FILE
NO ORIGINAL DRAWING EXISTS FOR THIS ITEM. THE ENGINEERING GRAPHICS DATA FOR THIS ITEM RESIDES IN THE PRODUCT GRAPHICS FILE AND IS CONTROLLED BY THE AGENCY DESIGNATED AS HAVING ITEM CONTROL.

DO NOT SCALE THIS DRAWING

THIS DRAWING/DATA FILE (AND THE INFORMATION SHOWN THEREON) IS CONFIDENTIAL AND PROPRIETARY AND SHALL NOT BE USED, DISCLOSED TO OTHERS, OR REPRODUCED BY ANY MEANS FOR ANY PURPOSE IN HARD COPY FORM OR IN MACHINE READABLE FILES, WITHOUT WRITTEN CONSENT OF CUMMINS INC., MARKETING CAD SERVICES DEPARTMENT.

LAST SECTION LETTER USED: A
REF. DRAWING STANDARDS: ANSI Y14.5M ISO R128
UNLESS OTHERWISE SPECIFIED DIMENSIONS ARE IN: MILLIMETERS
T 1 ARE IN: INCHES

DWN	MCS	03JAN.08
CHD	UNCHECKED	
APPD	LORIANN SMITH	23JAN.08
APPD		

CUMMINS INC.

ITEM NAME: QSL Z07-586-02
IDENTIFIER: INSTALLATION DIAGRAM
SIZE: J
CODE IDENT. NO.:
ITEM NUMBER: 4953827
SCALE: 1/4 AND NOTED
ITEM CONTROL: MCS
SHEET 1 OF 2